ASSEMBLY INSTRUCTIONS

Model : Callie-Brown-QB-HB/FB
Callie-Brown-QB-SR/Slats
Callie-Brown-QB-FB DWR

Description : Queen Bed Headboard & Footboard
Queen Bed Side Rails & Slats
Queen Bed Footboard Drawers

Thank you for purchasing this quality product. Be sure to check all packing materials carefully for small parts, that may have come loose inside the carton during shipment

PART LIST : HEADBOARD & FOOTBOARD BOX

No	Description	Diagram	Quantity
A	Headboard		1 pc
B	Footboard		1 pc
C	Headboard Leg (L)		1 pc
D	Headboard Leg (R)		1 pc
E	Storage Rail		1 pc

PART LIST : SIDE RAILS BOX

No	Description	Diagram	Quantity
F	Side rail		2 pcs
G	Center slat Support		2 pcs
H	Bed slat		14 pcs
I	Bed slat support		4 pcs
J	Storage Box Wood Support		1 pc

PART LIST : STORAGE SIDE RAILS BOX

No	Description	Diagram	Quantity
K	Drawer		2 pcs

HARDWARE LIST

PACKED IN HEADBOARD

No	Description	Diagram	Size	Quantity
1	JCBC Bolt		M6 x 35mm	6 pcs
2	Spring Washer		Spring Washer 1/4" Blk	6 pcs
3	Flat Washer		Flat Washer 1/4" ID 13mm OD Blk	6 pcs
4	Allen Key		ALLEN KEY m4x65mm Blk	1 pc
5	Allen Key		ALLEN KEY m5x65mm Blk	1 pc
6	Adaptor			

HARDWARE LIST

PACKED IN SIDE RAILS

No	Description	Diagram	Size	Quantity
7	Flat Head Chipboard Screw		CSK M4 x 32mm	28 pcs
8	JCBC Bolt		M6 x 35mm	6pcs
9	JCBC Bolt		M6 x 50mm	5 pcs
10	Spring Washer		Spring Washer 1/4" Blk	6 pcs
11	Flat Washer		Flat Washer 1/4" ID 19mm OD Bl	6 pcs
12	Allen Key		ALLEN KEY m4x65mm Blk	1 pc
13	Allen Key		ALLEN KEY m5x65mm Blk	1 pc
14	Flat Washer		Flat Washer 1/4" ID 13mm OD Bl	4 pcs
15	Flat Head Chipboard Screw		CSK M4 x 20mm	2 pcs

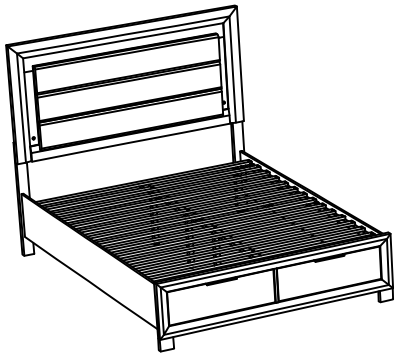

COMPLETE ASSEMBLY

NOTE : MUST TIGHTEN SCREWS PERIODCALLY WITH USE SCREW WILL BECOME LOOSE CHECK TIGHTNESS OF ALL SCREW EVERY 6-8 WEEKS.

STEP 1 :Attach Head Board Leg (C & D) to Head Board (A) as shown using JCBC BOLT (1) with Spring Washer (2),Flat washer (3) and securing with ALLEN KEY (4).

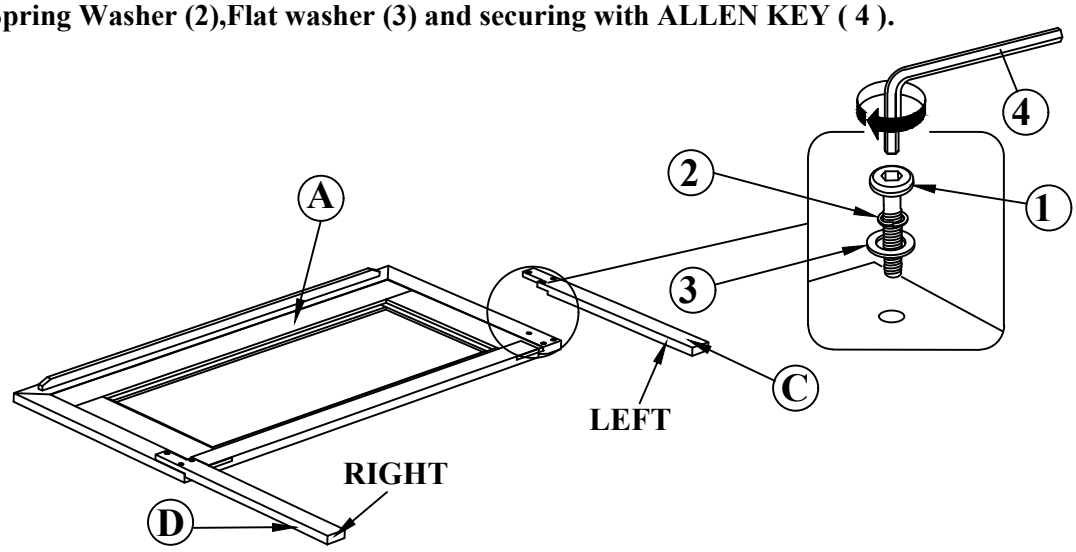

STEP 2 : Loosen the JCBB Bolt from Headboard (A) and Footboard (B) using ALLEN KEY (5).
Attach the Side Rail (F) to Headboard (A) and Footboard (B) by pushing the bracket down to fit it.
Tighten the JCBB Bolt by ALLEN KEY (5).

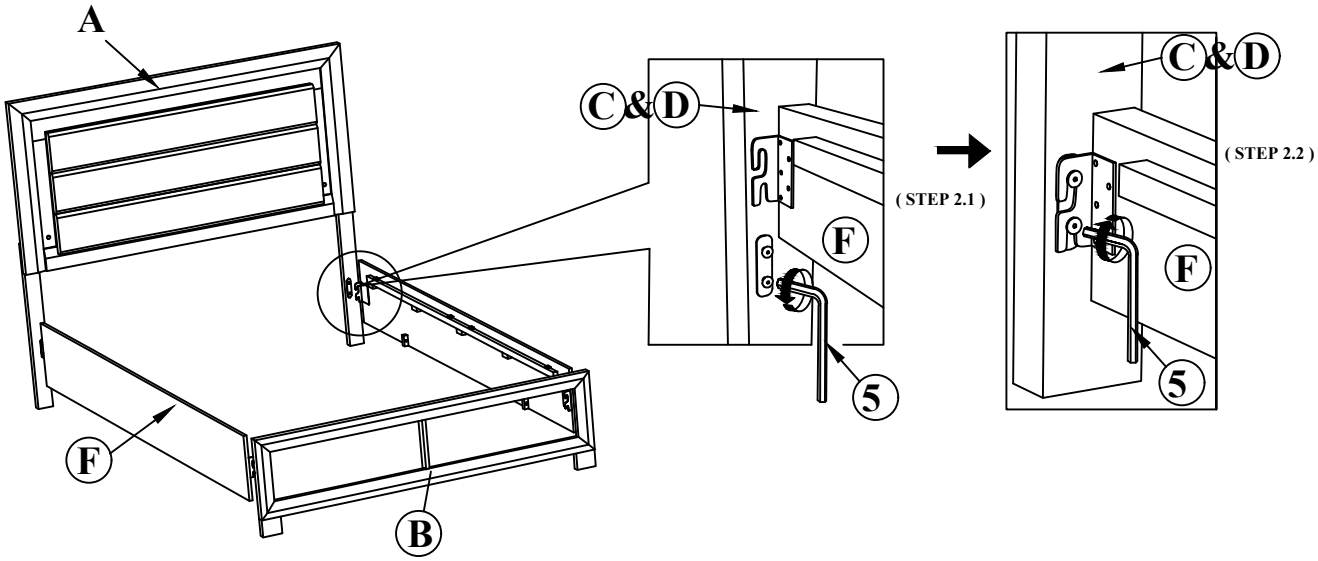

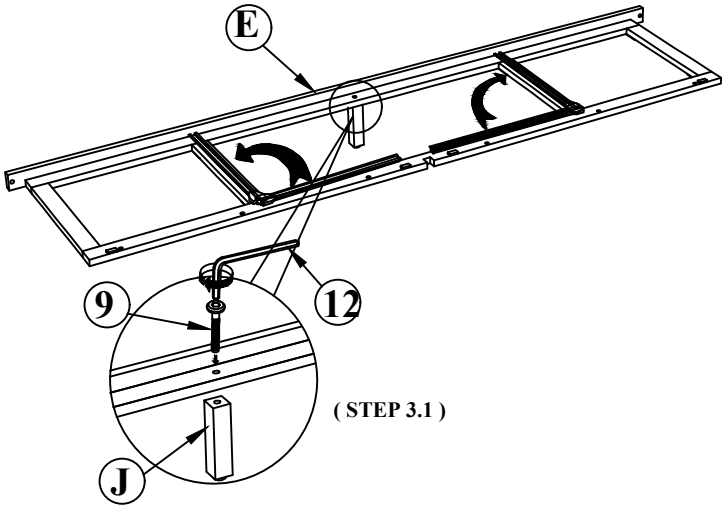

NOTE : MUST TIGHTEN SCREWS PERIODCALLY WITH USE SCREW WILL BECOME LOOSE CHECK TIGHTNESS OF ALL SCREW EVERY 6-8 WEEKS.

STEP 4 : Attach the Storage Rail (E) between Footboard (B) and side rails (F) as shown.

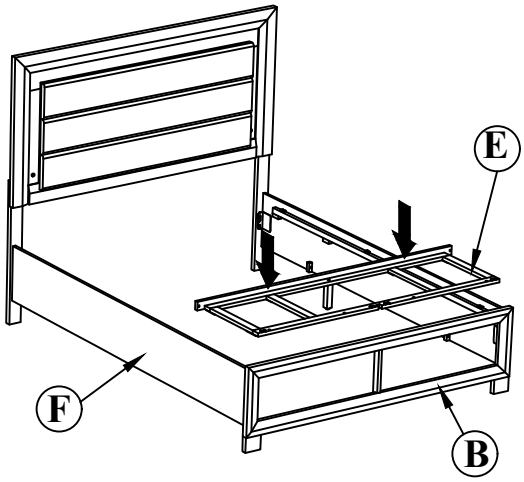

STEP 5: Tighten the Storage Rail (E) to Footboard (B) as shown. Using JCBC BOLT (8) with Spring Washer (10),Flat washer (11) and securing with ALLEN KEY (12).

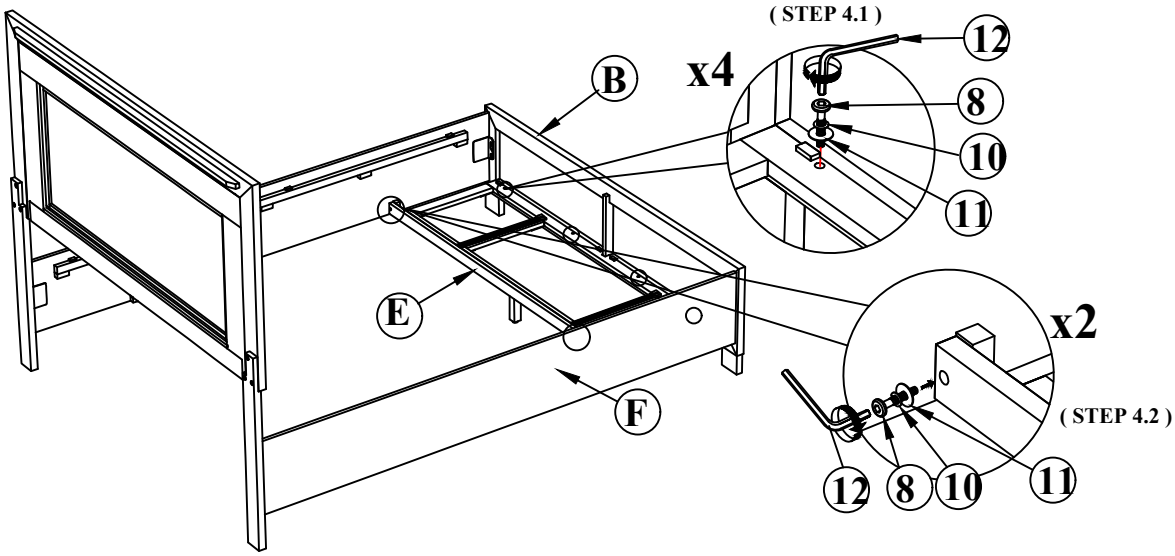

STEP 6 : Insert the Drawer (K) at the Storage Rail (E).Align drawer and using CSK Screw(15).Then tighten with Screw Driver(Not Included)

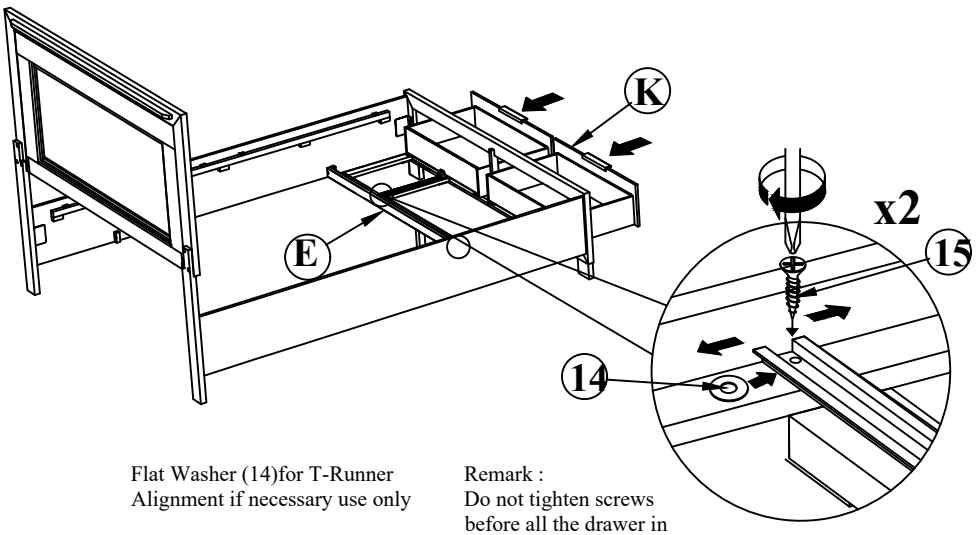

Flat Washer (14)for T-Runner Alignment if necessary use only

Remark :
Do not tighten screws before all the drawer in perfect position.

NOTE : MUST TIGHTEN SCREWS PERIODCALLY WITH USE SCREW WILL BECOME LOOSE CHECK TIGHTNESS OF ALL SCREW EVERY 6-8 WEEKS.

STEP 7 : Attach Bed slat support (I) and Center slat Support (G)to bed slat (H)as shown. Then Using JCBC Bolt (9) and securing with ALLEN KEY (12).

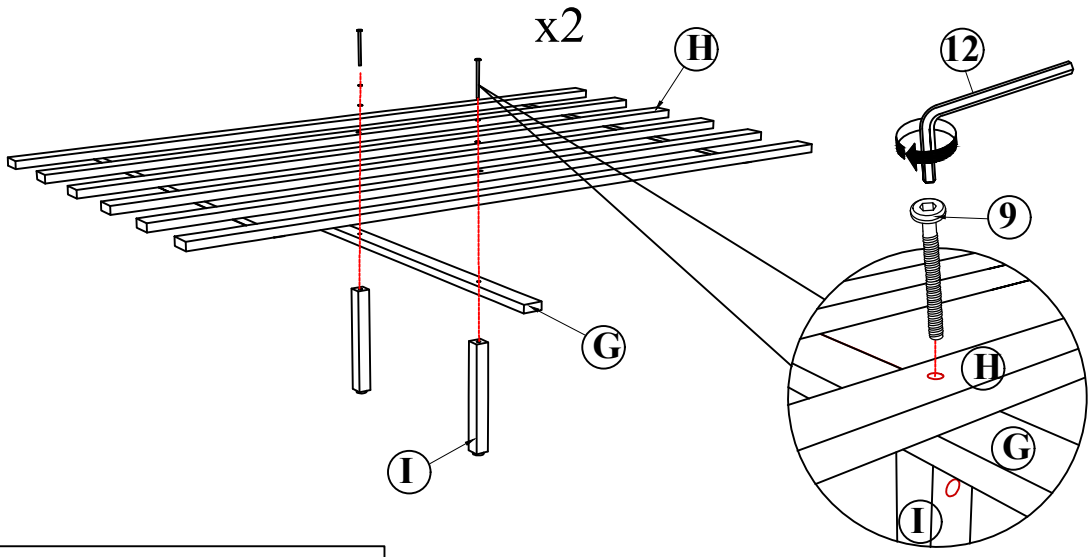

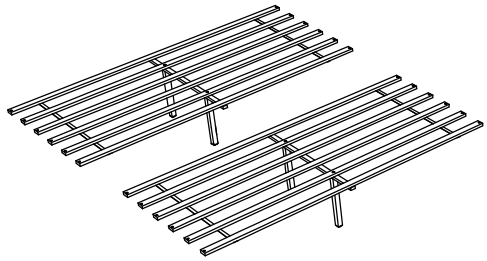

STEP 8 :Install the slat assembly as shown.

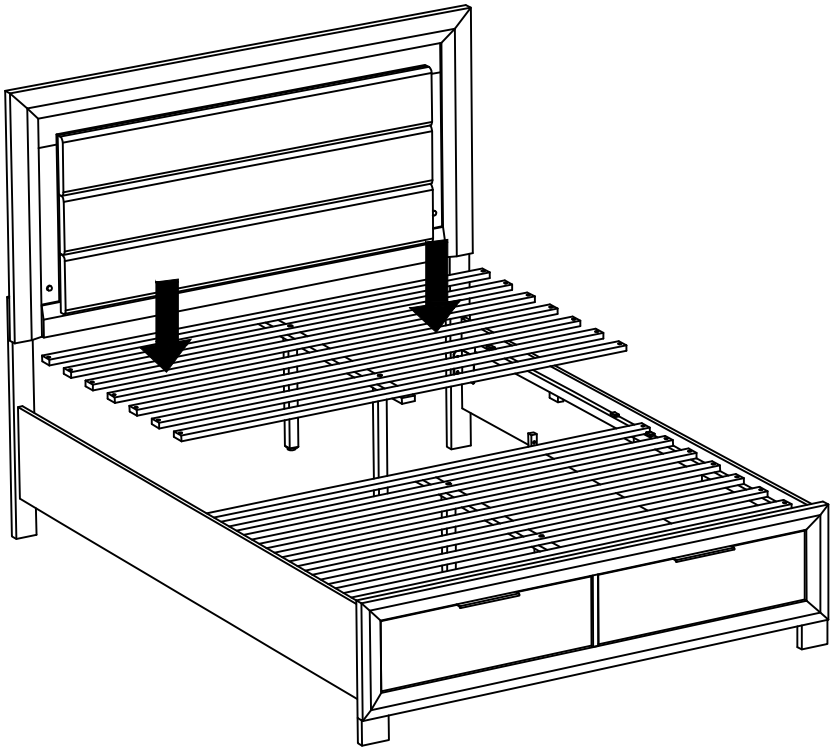

NOTE : MUST TIGHTEN SCREWS PERIODCALLY WITH USE SCREW WILL BECOME LOOSE CHECK TIGHTNESS OF ALL SCREW EVERY 6-8 WEEKS.

STEP 9 : Fix the Bed Slat (H) by push closely to the Side Rail (F) by using CSK Screw (7) . Then securing with screw driver(not include) as shown.

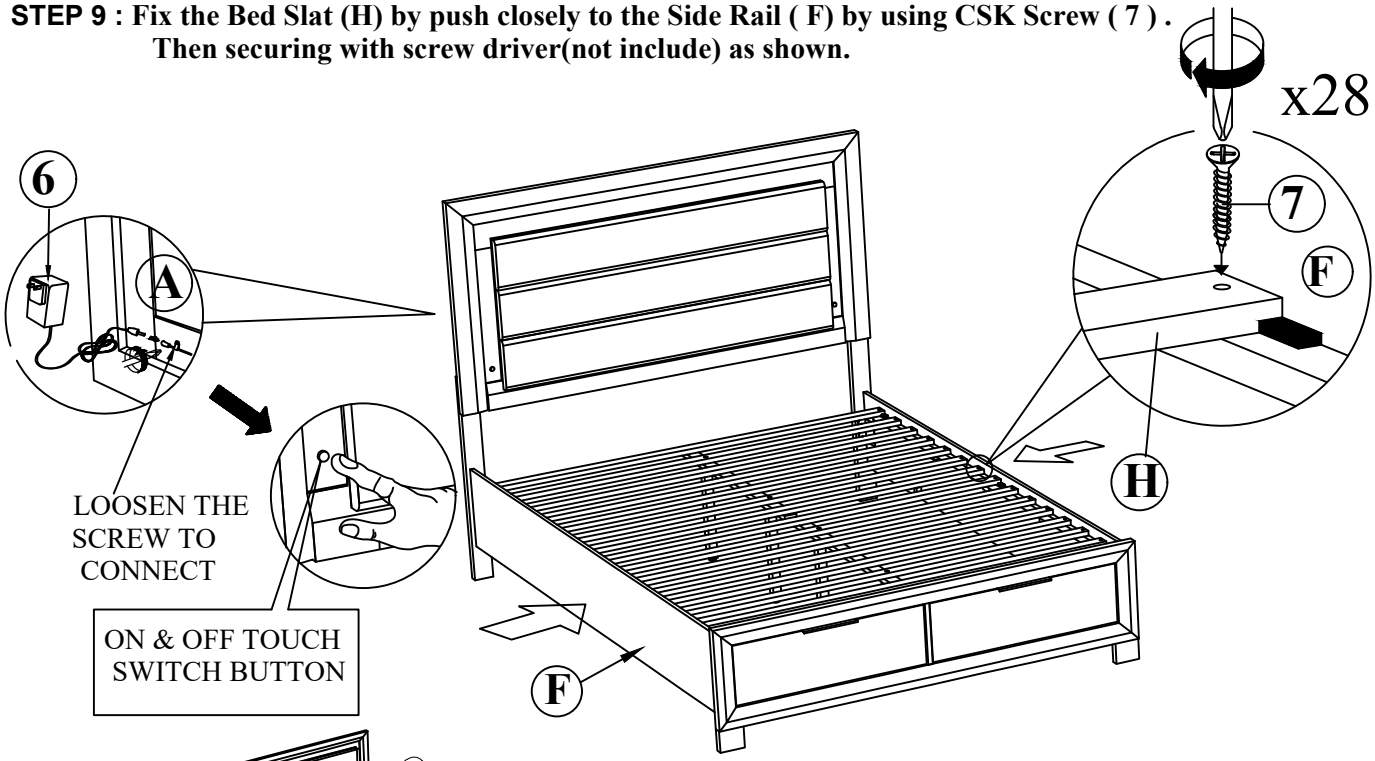

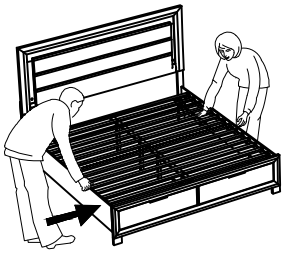

NOTE:

1-Push the side rail inward until the slats are flush and resting on the side rail support then fasten each slat to the side rail support using the provided screw.

2-The side rail warpage is a temporary condition, it will straighten out once the bed is fully assembled.

STEP 10:

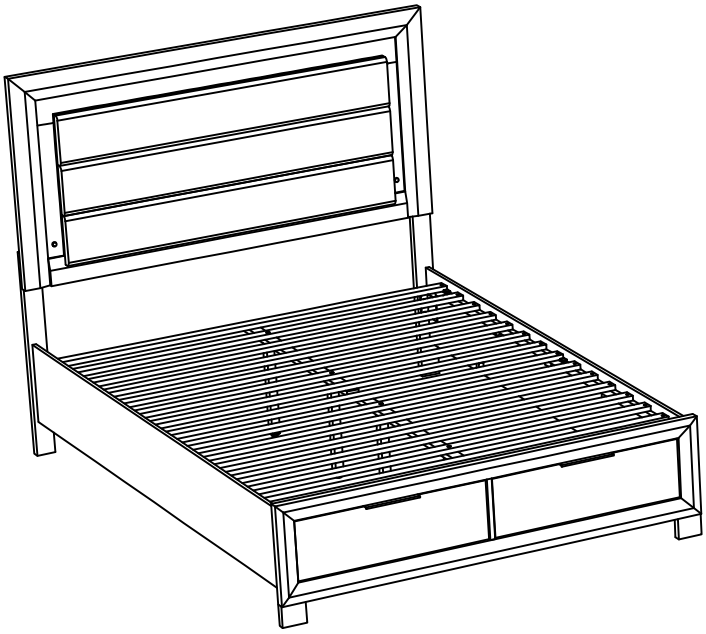

COMPLETED ASSEMBLY

NOTE : MUST TIGHTEN SCREWS PERIODCALLY WITH USE SCREW WILL BECOME LOOSE CHECK TIGHTNESS OF ALL SCREW EVERY 6-8 WEEKS.